Sensor/actuator box - SACB-8/16-L- 5,0PUR SCO P

1452725

https://www.phoenixcontact.com/us/products/1452725

Please be informed that the data shown in this PDF document is generated from our Online Catalog. Please find the complete data in the user documentation. Our General Terms of Use for Downloads are valid.

Sensor/actuator box, application: Standard, connection method: M12-SPEEDCON-socket Plastic, number of slots: 8, number of positions: 5, coding: A - standard, slot assignment: Double, status display: yes, pnp; master cable connection: Fixed connection 180°, PUR/PVC, cable length: 5 m, shielding: no

Your advantages

- Safety in the field, thanks to molded housing and high degree of protection
- Convenient: increased machine availability thanks to quick and easy diagnostics
- Save space: distributor box with double occupancy for two sensors in one slot
- Save time, thanks to installation with SPEEDCON fast locking system

Commercial Data

Item number	1452725
Packing unit	1 pc
Minimum order quantity	1 pc
Sales Key	B08
Product Key	BF3CBA
Catalog Page	Page 262 (C-2-2019)
GTIN	4046356554008
Weight per Piece (including packing)	1,231 g
Weight per Piece (excluding packing)	1,130 g
Customs tariff number	85444290
Country of origin	DE

Technical Data

Notes

Assembly instruction:	NOTE: Observe the permissible bending radii when laying conductors, since the degree of protection may be put in jeopardy if the bending forces are too high. Alleviate mechanical loads upstream of the connector, e.g. by using cable ties.
Note on application	Unused slots are to be sealed off prior to commissioning. Suitable sealing elements are to be found under "Accessories".

Product properties

Product type	Distributor boxes with M8 to M12 slots
Number of positions	5
Application	Standard
Number of slots	8
Coding	A - standard

Material specifications

Color	anthracite
Flammability rating according to UL 94	V0
Material of threaded sleeve	PBT
Contact material	Cu alloy
Contact surface material	gold-plated
Contact carrier material	PA
O-ring material	NBR
Material of the moulding mass	PUR
Housing material	PBT

Dimensions

Dimensional drawing	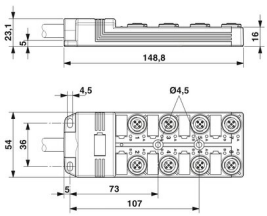
Width	54 mm
Height	23 mm
Length	149 mm

Connection data

Pin assignment	
	1 / 4 (A) = WH

Slot/position = Wire color or connection	1 / 2 (B) = GYPK
	2 / 4 (A) = GN
	2 / 2 (B) = RDBU
	3 / 4 (A) = YE
	3 / 2 (B) = WHGN
	4 / 4 (A) = GY
	4 / 2 (B) = BNGN
	5 / 4 (A) = PK
	5 / 2 (B) = WHYE
	6 / 4 (A) = RD
	6 / 2 (B) = YEBN
	7 / 4 (A) = BK
	7 / 2 (B) = WHGY
	8 / 4 (A) = VT
	8 / 2 (B) = GYBN
	1-8 / 1 (+ 24 V) = BN
	1-8 / 3 (0 V) = BU
	1-8 / 5 (PE) = GNYE

LED signaling

Status display present	yes

Electrical properties

Max. operating voltage U_{max}	30 V DC
Local diagnostics	Supply voltage Green LED
	Status display I/O Yellow LED
Nominal voltage U_N	24 V DC
Rated current, total	12 A
Max. current carrying capacity per path	2 A
Current carrying capacity per slot	4 A

Cable / line

Cable length	5 m
Cable weight	183.7 kg/km
UL AWM Style	20549 (80°C/300 V)
Number of positions	19
Shielded	no
Cable type	PUR/PVC black [PUR]
Conductor structure signal line	28x 0.15 mm
AWG signal line	20
Conductor cross section	16x 0.5 mm² (Signal line)
	3x 1 mm² (power line)
Wire diameter incl. insulation	1.5 mm ±0.1 mm (Signal line)
	2.1 mm ±0.1 mm (power line)

External cable diameter	10.5 mm ±0.2 mm
Outer sheath, material	PUR
External sheath, color	black RAL 9005
Conductor material	Bare Cu litz wires
Material wire insulation	PVC
Single wire, color	brown, blue, green/yellow, white, green, yellow, gray, pink, red, black, violet, gray/pink, red/blue, white/green, brown/green, white/yellow, yellow/brown, white/gray, gray/brown
Inner sheath thickness	≥ 0.15 mm
Thickness, outer sheath	≥ 0.76 mm
Overall twist	Wires twisted in layers
Nominal voltage, cable	300 V
Test voltage	2000 V
Minimum bending radius, fixed installation	7.5 x D
Minimum bending radius, flexible installation	10 x D
Max. bending cycles	1500000
Flame resistance	according to DIN EN 50265
Resistance to oil	according to VDE 0472 Part 803
Other resistance	Highly resistant to acids, alkaline solutions and solvents
Special properties	Silicone-free
Ambient temperature (operation)	-40 °C ... 90 °C (cable, fixed installation)
	-5 °C ... 80 °C (Cable, flexible installation)
Sensor/actuator connection system	M12-SPEEDCON-socket
Connection method	Fixed connection
Tightening torque of mounting screw for fixing the housing	0.5 Nm
Tightening torque slot sensor/actuator cable	0.4 Nm
Ambient temperature (operation)	-40 °C ... 90 °C (for fixed installation)
	-5 °C ... 80 °C (for flexible installation)

Standards and regulations

Standards/specifications	IEC 61076-2-101

Ambient conditions

Degree of protection	IP65
	IP67
Ambient temperature (operation)	-25 °C ... 80 °C

Drawings

Schematic diagram

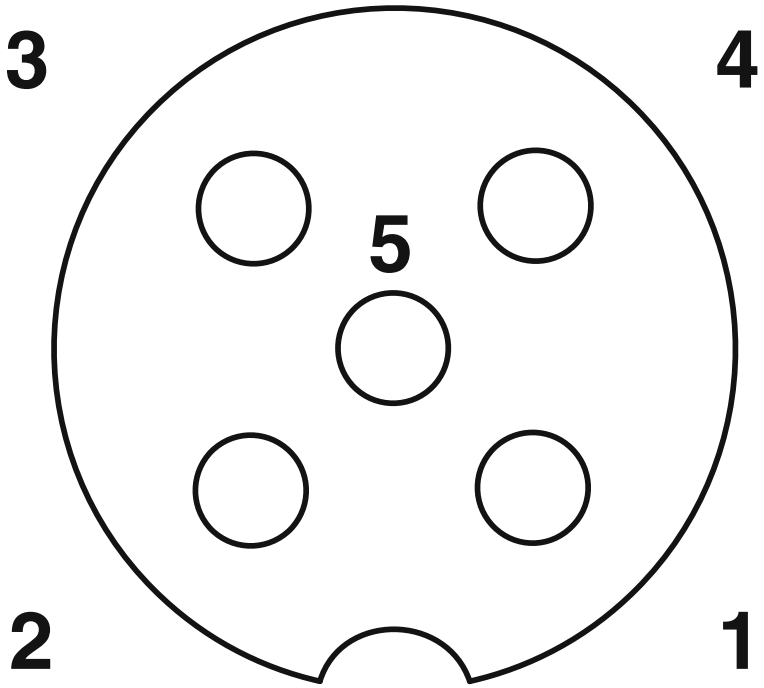

M12 slot, socket, 5-pos.

Dimensional drawing

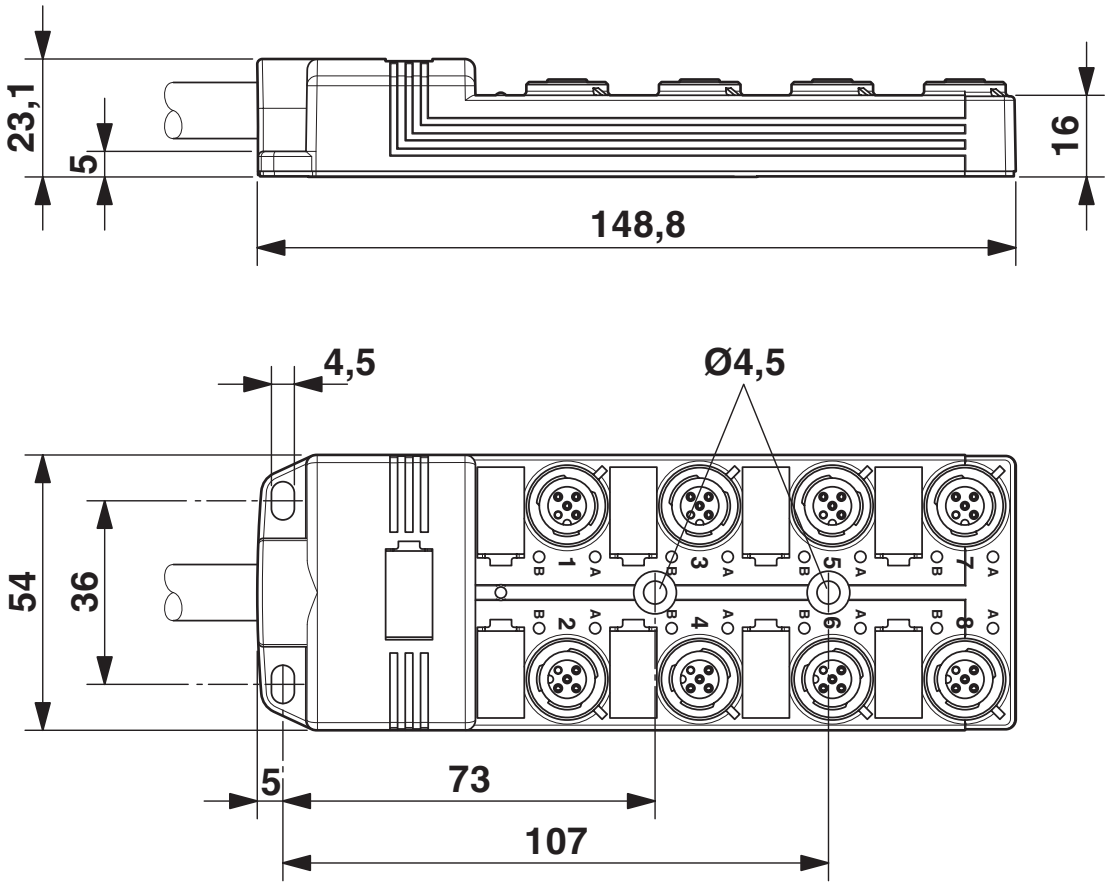

Circuit diagram

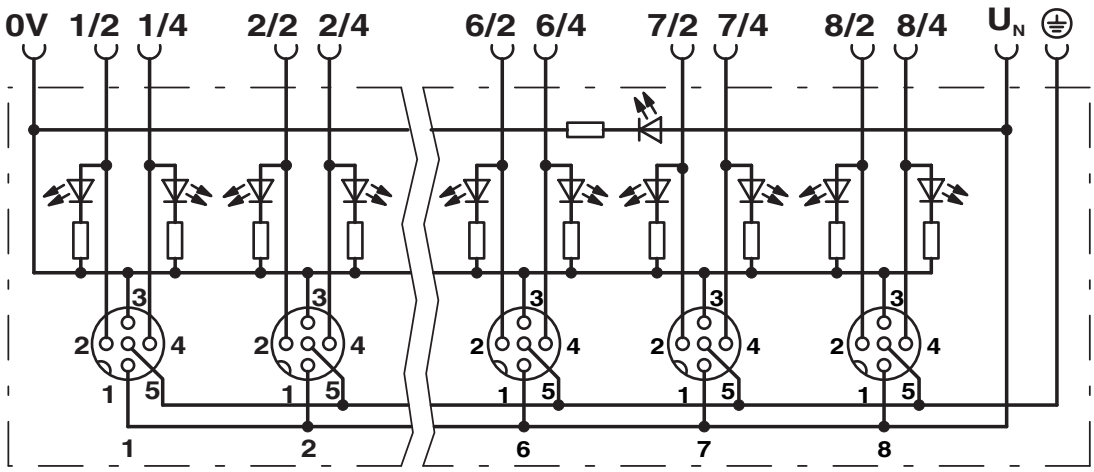

Approvals

cUL Recognized
Approval ID: FILE E 118976

	Nominal Voltage U_N	Nominal Current I_N	Cross Section AWG	Cross Section mm^2
			-	-

UL Recognized
Approval ID: FILE E 118976

	Nominal Voltage U_N	Nominal Current I_N	Cross Section AWG	Cross Section mm^2
Signal		2 A	-	-
		4 A	-	-

EAC
Approval ID: RU C-DE.BL08.B.00286

EAC
Approval ID: RU C-DE.BL08.B.00511

cULus Recognized

Classifications

ECLASS

ECLASS-9.0	27440108
ECLASS-10.0.1	27440108
ECLASS-11.0	27440108

ETIM

ETIM 8.0	EC002585

UNSPSC

UNSPSC 21.0	31251500

Environmental Product Compliance

China RoHS	Environmentally friendly use period: unlimited = EFUP-e
	No hazardous substances above threshold values

Accessories

Screw plug

Screw plug - PROT-MS SCO - 1553129

https://www.phoenixcontact.com/us/products/1553129

M12 screw plug with fast-locking system for unoccupied M12 female connectors of sensor/actuator cables, boxes, and flush-type connectors

Torque screwdriver

Torque screwdriver - TSD 04 SAC - 1208429

https://www.phoenixcontact.com/us/products/1208429

Torque screwdriver, with preset torque of 0.4 Nm and 4 mm hexagonal drive for M12 connectors

Torque screwdriver

Torque screwdriver - TSD-M 1,2NM - 1212224

https://www.phoenixcontact.com/us/products/1212224

Torque screw driver, accuracy as per EN ISO 6789 standard, adjustable from 0.3 - 1.2 Nm

Adapter insert

Adapter insert - TSD-M SAC-BIT ADAPTER - 1212600

https://www.phoenixcontact.com/us/products/1212600

Adapter bit for TSD-M...torque tools, E6.3-1/4" drive with 4 mm hexagon to accommodate SAC bits

Tool

Tool - SAC BIT M12-D15 - 1208432

https://www.phoenixcontact.com/us/products/1208432

Nut for assembling sensor/actuator cables with M12 connector and M12 connectors for assembly, with a knurl diameter of 15 mm, for 4 mm hexagonal drive

Tool

Tool - SACC BIT M12-D20 - 1208445

https://www.phoenixcontact.com/us/products/1208445

Nut for assembling M12 connectors for assembly with a knurl diameter of 20 mm, for 4 mm hexagonal drive

Snap-in markers

Snap-in markers - UC-EM (17,5X9) - 0827490

https://www.phoenixcontact.com/us/products/0827490

Snap-in markers, Sheet, white, unlabeled, can be labeled with: BLUEMARK ID, BLUEMARK ID COLOR, BLUEMARK CLED, BLUEMARK LED, CMS-P1-PLOTTER, PLOTMARK, mounting type: snapped, lettering field size: 17.5 x 9 mm, Number of individual labels: 20

Snap-in markers

Snap-in markers - UC-EM (17,5X9) CUS - 0828238

https://www.phoenixcontact.com/us/products/0828238

Snap-in markers, can be ordered: by sheet, white, labeled according to customer specifications, mounting type: snapped into marker carrier, lettering field size: 17.5 x 9 mm, Number of individual labels: 20

Snap-in markers

Snap-in markers - UCT-EM (17,5X9) - 0801491

https://www.phoenixcontact.com/us/products/0801491

Snap-in markers, Sheet, white, unlabeled, can be labeled with: TOPMARK NEO, TOPMARK LASER, BLUEMARK ID COLOR, BLUEMARK ID, BLUEMARK CLED, THERMOMARK PRIME, THERMOMARK CARD 2.0, THERMOMARK CARD, mounting type: snapped, lettering field size: 17.5 x 9 mm, Number of individual labels: 24

Snap-in markers

Snap-in markers - UCT-EM (17,5X9) CUS - 0801575

https://www.phoenixcontact.com/us/products/0801575

UniCard sheet, for labeling devices from other manufacturers, for overview table see download area, labeled according to customer specifications

Snap-in markers

Snap-in markers - UC-EM (17,5X9) YE - 0827494

https://www.phoenixcontact.com/us/products/0827494

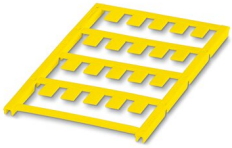

Snap-in markers, Sheet, yellow, unlabeled, can be labeled with: BLUEMARK ID COLOR, BLUEMARK ID, BLUEMARK CLED, PLOTMARK, CMS-P1-PLOTTER, mounting type: snapped, lettering field size: 17.5 x 9 mm, Number of individual labels: 20

Snap-in markers

Snap-in markers - UC-EM (17,5X9) YE CUS - 0828239

https://www.phoenixcontact.com/us/products/0828239

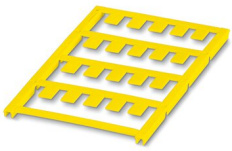

Snap-in markers, can be ordered: by sheet, yellow, labeled according to customer specifications, mounting type: snapped into marker carrier, lettering field size: 17.5 x 9 mm, Number of individual labels: 20

Snap-in markers

Snap-in markers - UCT-EM (17,5X9) YE - 0801492

https://www.phoenixcontact.com/us/products/0801492

Snap-in markers, Sheet, yellow, unlabeled, can be labeled with: TOPMARK NEO, TOPMARK LASER, BLUEMARK ID COLOR, BLUEMARK ID, BLUEMARK CLED, THERMOMARK PRIME, THERMOMARK CARD 2.0, THERMOMARK CARD, mounting type: snapped, lettering field size: 17.5 x 9 mm, Number of individual labels: 24

Snap-in markers

Snap-in markers - UCT-EM (17,5X9) YE CUS - 0801576

https://www.phoenixcontact.com/us/products/0801576

UniCard sheet, for labeling devices from other manufacturers, for overview table see download area, labeled according to customer specifications

DIN rail adapter

DIN rail adapter - UTA 136 - 2853996

https://www.phoenixcontact.com/us/products/2853996

Universal DIN rail adapter, for screwing on switchgear

Phoenix Contact 2022 © - all rights reserved
https://www.phoenixcontact.com

Phoenix Contact USA
586 Fulling Mill Road
Middletown, PA 17057, United States
(+717) 944-1300
info@phoenixcon.com